92261

Katrin Plastic Bin 25 Litre With Lid For Waste, Black

- Waste bin that holds 25 litres of paper, which means that the toilet environment stays clean
- Made from ABS Plastic
- Can be used with or without a lid
- Can be wall mounted, freeing up floor space
- Light, robust and simple to empty

ISO 9001

Country of Origin: Italy

Product

Length/Depth	330 mm	Colour	Black	
Width	230 mm	Gross weight	1.985 kg	
Height	550 mm			

Trading unit

Length/Depth	335 mm	Gross weight	4.57 kg	EAN 6 414300 092261
Width	235 mm	Consumer packs/ trading unit	2	
Height	600 mm			

Copyright © Metsä Tissue Corporation

Pallet

Length/Depth	1,200 mm	Gross weight	192.53 kg	EAN	6 414300 092278
Width	800 mm	Trading units / pallet	39		
Height	1,950 mm				

Measurements and Installing

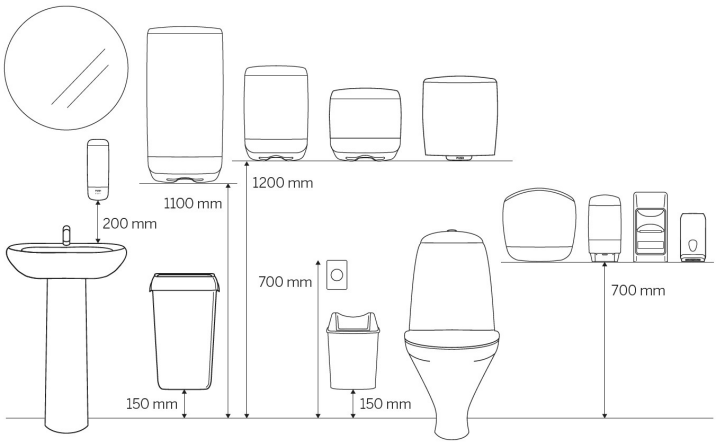

This leaflet is provided for information purposes only and no liability of any kind is accepted for potential errors or inaccuracies. Metsä Tissue reserves the right to alter its products, product information and product range without any notice.

Copyright © Metsä Tissue Corporation